KAWASAKI ZX-6R, Complete exhaust system / RACING LINE
Product code: S-K6R6-ZC
S-K6R6-ZT

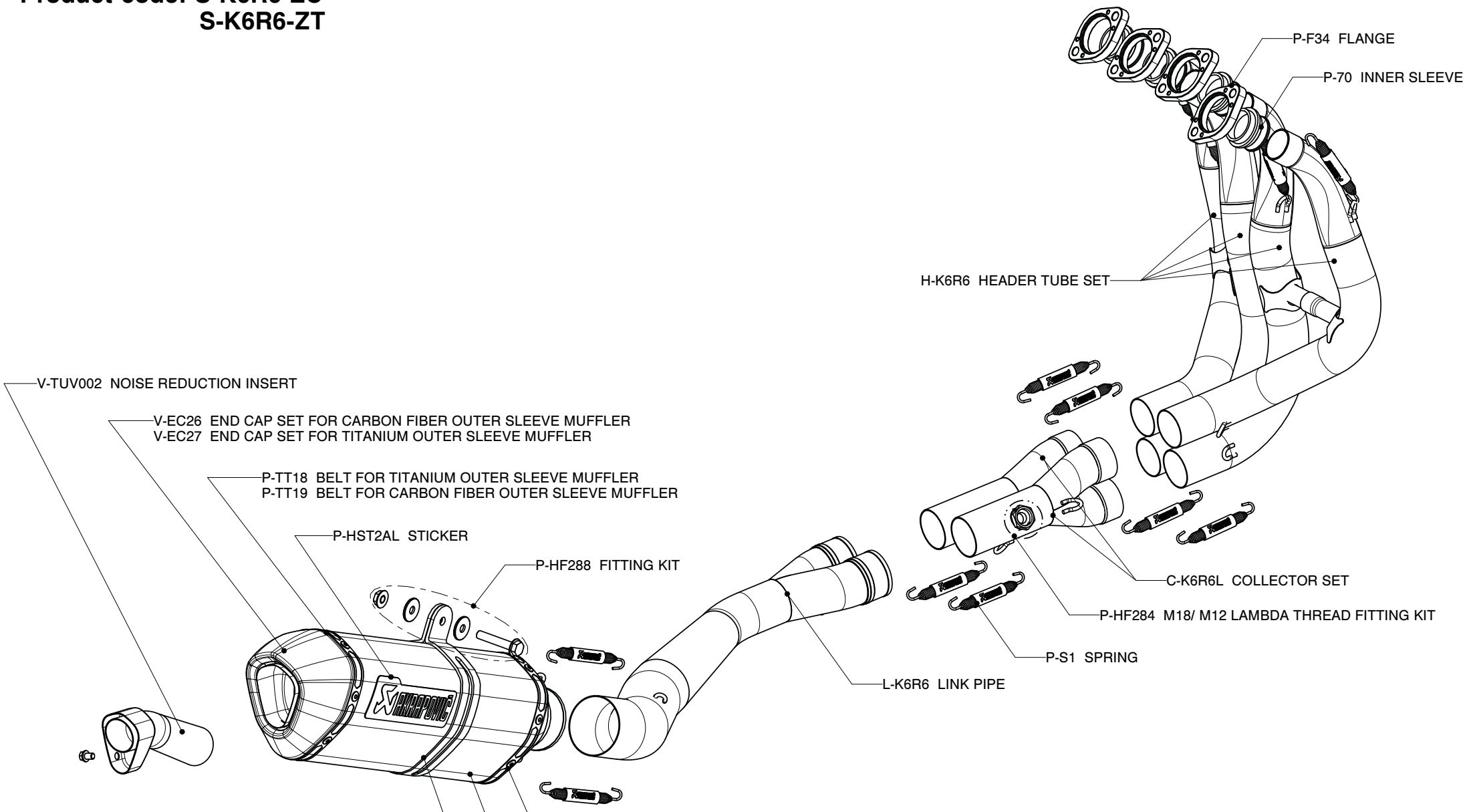

MUFFLER REPAIR KITS	
REPACK	P-RPCK26
SLEEVE	P-RKS89ZT35 - TITANIUM P-RKS88ZC35 - CARBON